48" FAWNA

FRONT VIEW

(no counter top)

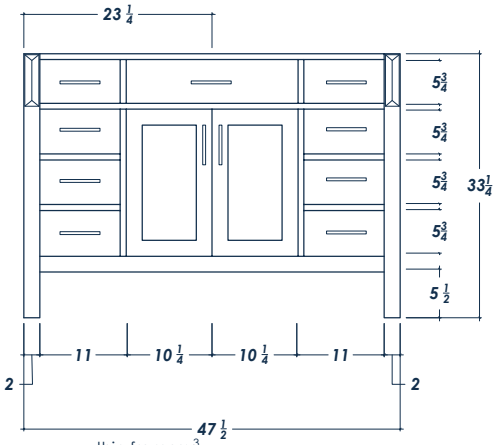

thin frames: $\frac{3}{4}$
thick frame bottom: 2

SIDE VIEW

(with counter top)

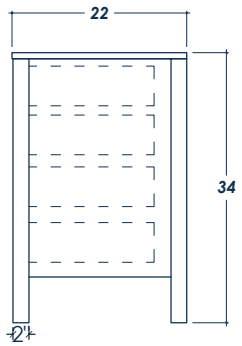

BACK VIEW

(no counter top)

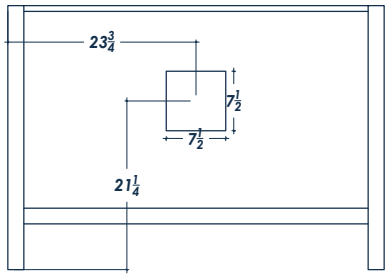

ISOMETRIC VIEW
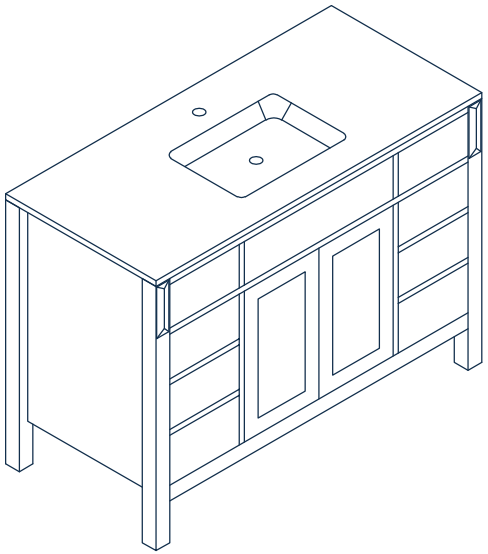
(with counter top)